USB PD Fast Charging Protocol Forwarding Chip CH220

Datasheet

Version: 1.2

https://wch-ic.com

1. Overview

CH220 is a USB PD fast charging protocol forwarding chip designed to forward USB PD protocols between 2 Type-C interfaces, while implementing voltage limiting, current limiting, power deduction, and overcurrent protection functions, with related parameters freely customizable.

The CH220 incorporates a high-side VBUS path NMOS and gate driver, enabling control of the VBUS power path using the built-in NMOS or driving an external N-MOSFET to achieve lower on-resistance.

The CH220 is available in a QFN16 (QFN16-3*3) package.

2. Feature

- Support 3.3V-22V wide voltage input
- Support PD 2.0/3.0 fast charging protocols
- Support PD protocol voltage and current limiting functions
- Support power deduction
- Built-in 25V 3.25A VBUS power path NMOS
- Built-in overcurrent protection function

3. Application

- Type-C interface converter
- Power distribution cable

4. Package

CH220P (QFN16)

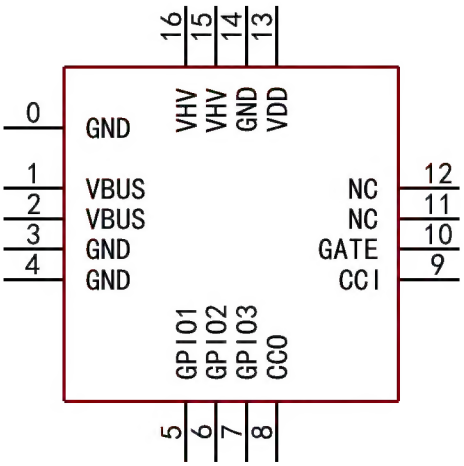

5. Pin

Pin No.	Pin name	Pin description
15/16	VHV	High-voltage NMOS drain inside the chip, VBUS power supply input terminal, LDO input pin inside the chip
1/2	VBUS	High-voltage NMOS source inside the chip, VBUS power supply output terminal
13	VDD	The LDO output pin inside the chip requires an external 1uF decoupling capacitor.
0/3/4/14	GND	Common ground terminal
5	GPIO1	General-purpose input/output pins, custom functions
6	GPIO2	
7	GPIO3	
8	CCO	USB PD communication pin on the power supply output terminal
9	CCI	USB PD communication pin on the power supply input terminal
10	GATE	Internal chip gate driver output terminal, internal chip high-voltage NMOS gate
11/12	NC	Undefined pin, must be left floating

6. Typical Application

CH220P reference circuit

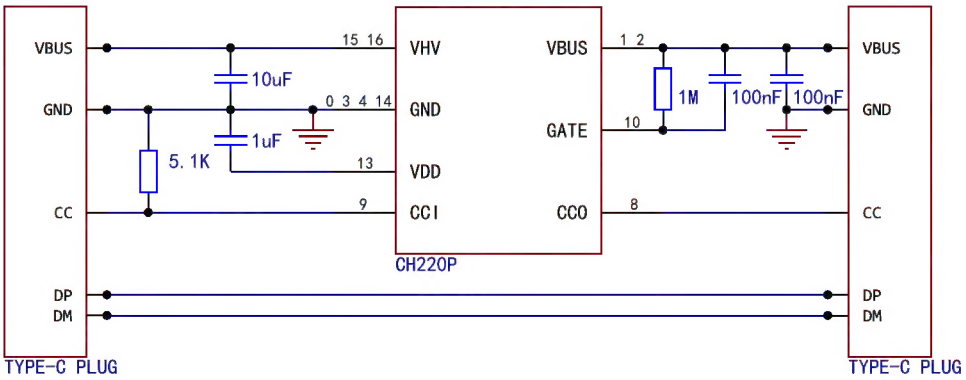

7. Functional Description

The CH220P is typically used for USB PD protocol relaying between Type-C input and Type-C output interfaces. Its built-in high-voltage LDO, power path NMOS, and other peripherals help users simplify peripheral device and circuit design.

7.1 Voltage Current Limiting Function

During the process of relaying USB PD power supply capabilities, the CH220P will limit voltage and current according to the settings. For example, when the voltage limit is set to 15V and the current limit is set to 2.5A, voltage settings higher than 15V (e.g., 20V/1.5A) will be removed, while current settings exceeding 2.5A (e.g., 5V/3A, 9V/3A) will be adjusted to 5V/2.5A and 9V/2.5A, respectively.

The CH220P does not support relaying of the PPS protocol, and PPS settings will be removed.

The parameters for voltage and current limiting can be customized, with default values of 20V and 2.5A.

7.2 Power Deduction Function

The CH220P supports deducting a certain amount of power while relaying protocols for the device's own power supply. If power deduction is enabled, each power level will first be deducted before protocol relaying.

The power deduction function and related parameters can be customized. Power deduction is not enabled by default.

7.3 Overcurrent Protection Function

The CH220P has overcurrent protection functionality. When the current flowing through the NMOS exceeds the set value, the CH220P will forcibly disconnect the NMOS.

The overcurrent protection current parameter supports customization, with a default value of 3A. When using an external N-MOSFET, the overcurrent protection setting parameter will need to be recalculated.

7.4 Power Path NMOS and Gate Driver

The CH220P has a built-in power path NMOS with a voltage rating of 25V and a maximum continuous conduction current of 3.25A, which can be used to control the conduction of power from VHV to VBUS. The chip's GATE pin is the output pin of the internal gate driver, which is used to drive the internal NMOS and can also drive an external N-MOSFET.

An external capacitor connected to the GATE pin can be used to adjust the turn-on speed of the NMOS. An excessively fast turn-on speed of the NMOS can cause a rapid drop in the VHV voltage during the turn-on instant, while an excessively slow turn-on speed can result in significant heat generation in the NMOS. The optimal turn-on time is 100μs to 1ms.

When using an internal NMOS, the typical capacitance value is 100nF. When using an external N-MOSFET, the capacitance value must be determined based on the parameters of the NMOS being used.

7.5 Power Path NMOS Expands Applications

The NMOS structure built into the CH220P is shown in (Figure 7.5.1).

If a lower conduction impedance is required, an external parallel N-MOSFET can be used, as shown in (Figure 7.5.2).

If bidirectional cutoff is required to prevent backflow, an external series N-MOSFET can be used, as shown in (Figure 7.5.3).

Figure 7.5.1 CH220P built-in NMOS

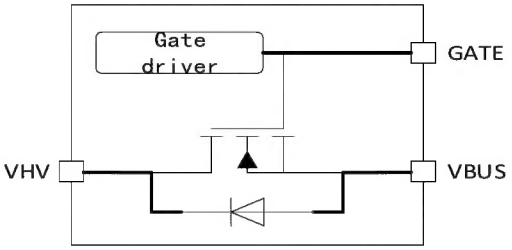

Figure 7.5.2 External parallel N-MOSFET scheme

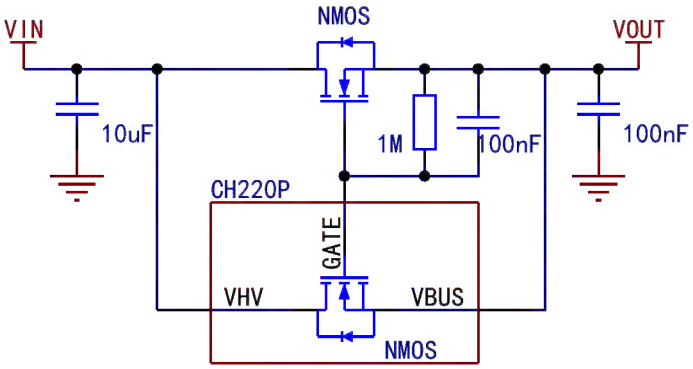

Figure 7.5.3 External series N-MOSFET scheme

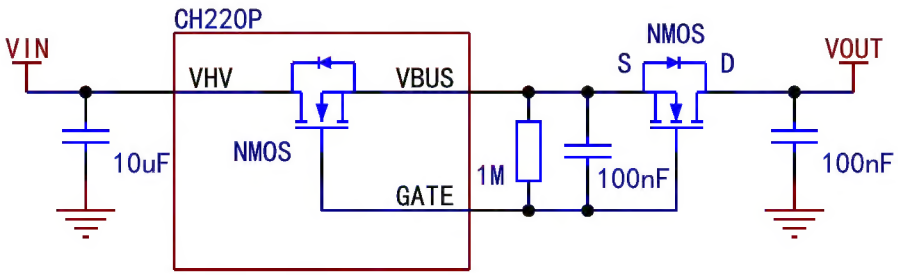

8. Parameters

8.1 Absolute Maximum Value (critical or exceeding the absolute maximum value will probably cause the chip to work improperly or even be damaged)

Name	Parameter Description	Min.	Max.	Unit
TA	Ambient temperature at work	-40	100	℃
TS	Ambient temperature during storage	-55	125	℃
VHV	High voltage power supply voltage (VHV pin connected to power supply, GND pin grounded)	-0.5	25.0	V
VDD	Operating power supply voltage (VDD pin is connected to power supply, GND pin is grounded)	-0.5	6.0	V
VIOCC	Voltage on non-high voltage pins CC1, CC2	-0.5	22.0	V
VIOHV	Voltage on the high voltage pin VBUS	-0.5	25	V
VIOHX	Voltage on the high voltage pin GATE	-0.5	VHV+6.5	V
INMOS	Continuous conduction current of NMOS power tube		3.25	A
PD	Maximum power consumption of the whole chip (VHV voltage * current +VHV discharge power consumption)		300	mW

8.2 Electrical Parameters (Test conditions: TA=25℃)

Name	Parameter Description		Min.	Typ.	Max.	Unit
VHV	High voltage supply voltage VHV		3.3	5.2	22	V
VDD	Power supply voltage VDD		3.2	4.7	4.8	V
ICC	Power supply current at work	VHV=20V		1.2	15	mA
		VHV=5V		1.0	8	
RNMOS	On-resistance transistor of NMOS power tube		20	28	45	mΩ
VR	Voltage threshold of power supply power-on reset		2.5	2.7	2.9	V

9. Package Information

Package form	Body size	Pin pitch		Order model
QFN16	3*3mm	0.50mm	19.7mil	CH220P

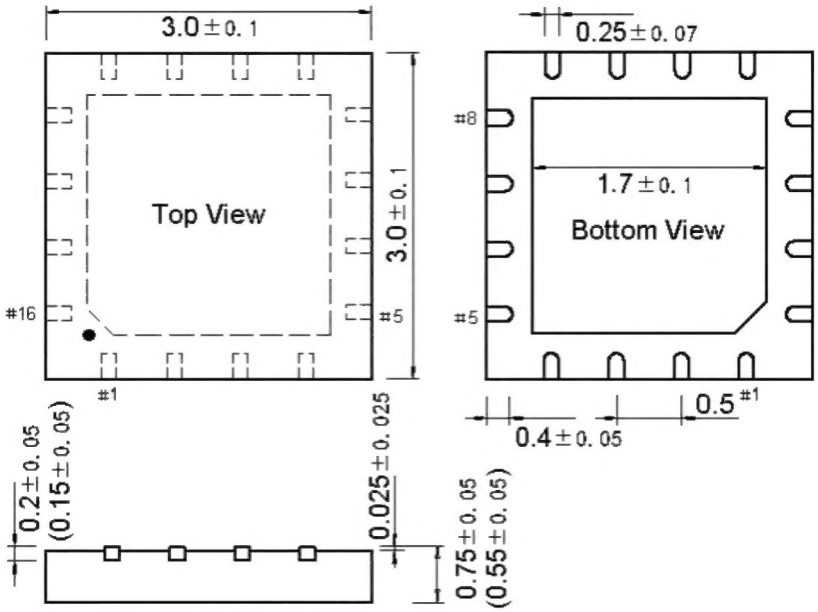

Note: All units marked in the packaging information chart are in mm (millimeters).